Interface panel of Z-Arm 1632

Instructions

Huiling-tech Robotic Co., Ltd

Instructions for Z-Arm 1632 App

I. Introduction of interfaces

The interfaces of the Z-Arm 1632 mechanical arm are at two places. One is the side edge of the arm's pedestal (A) and the other is the undersurface of the bottom arm (B). On the interface panel of A, there are Ethernet interface (J1), 24V power interface (J2), users' IO input interface DB9 (J3), users' IO output interface DB9 (J4), and WIFI extended interface (J5). On the interface panel of B, there are IO input and output interfaces DB9 (J6) and IO interface DB9 for the motor-driven controlling gripper (J7).

II. Diagram of the interfaces and instructions

1. Diagram of the interfaces at the base of A

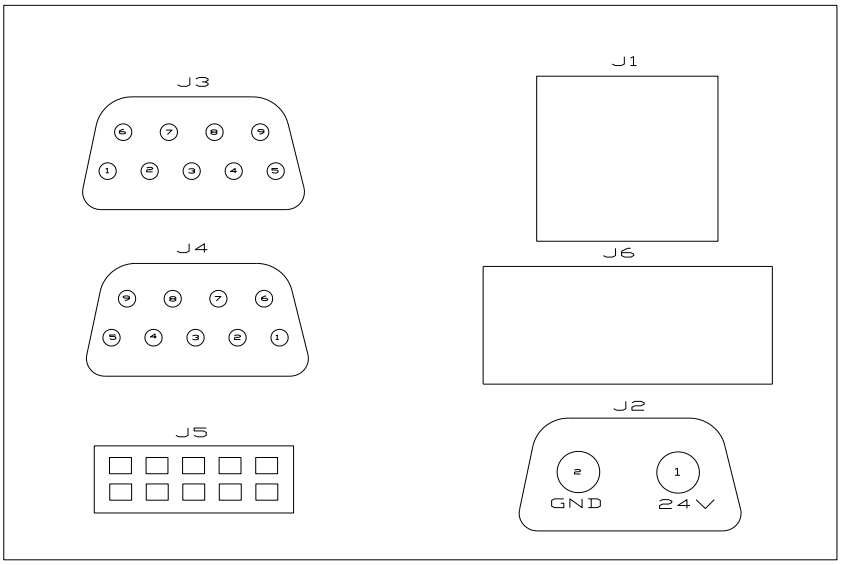

Figure 1

2. Definition of interfaces in Figure 1

①. J1 is an Ethernet interface and is used for the communication control between the mechanical arm and the PC host computer interface

②. J2 is the power input interface, with 24V DC voltage input.

③. J3 are the IO input interfaces for users, inside of which there are three sets of opt coupler isolated inputs.

④. J4 is the IO output interface, inside of which there are three sets of opt coupler Isolated NPN outputs.

⑤. J5 is the WIFI extended interface, which aims for communication control of APPs on cellphones with WIFI modules developed by our company.

⑥. J6 is power switch, turn on switch, power and light on, turn off the switch, power and light off.

3. Internal circuit design of J3 and J4 interfaces in Figure 1

①. Definition of main pin of J3 interface DB9

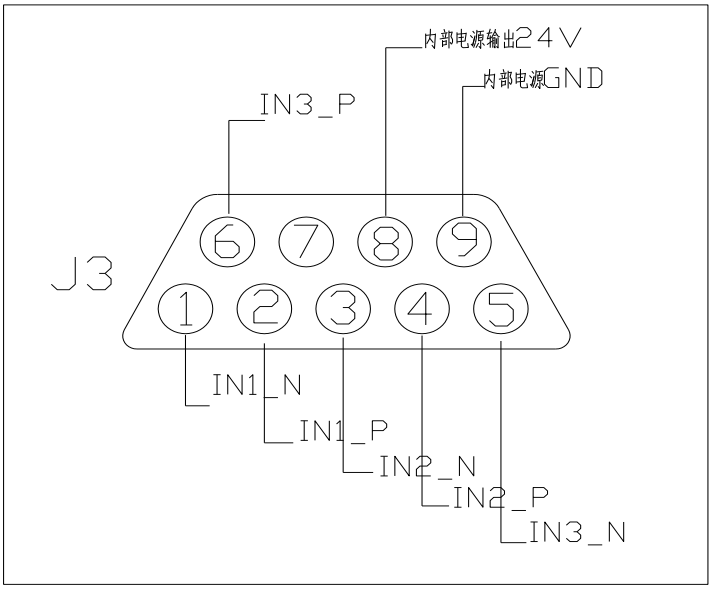

Figure 2

②. The simplified circuit design of J3 IO input interface

There are built-in opt couplers in Z-Arm 1632 arm IO input interface in order to achieve the electrical isolation. It has strong anti-interference ability. The working current is recommended to be around 10ma because if the current is too small, the driving performance will be affected. The typical input voltage should be 24V.

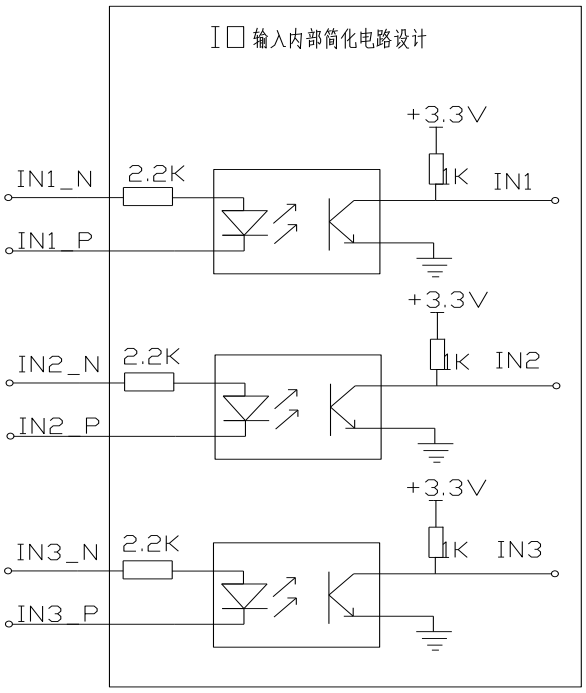

Figure 3

③. Definition of needle-holder connector pin of J4 interface DB9

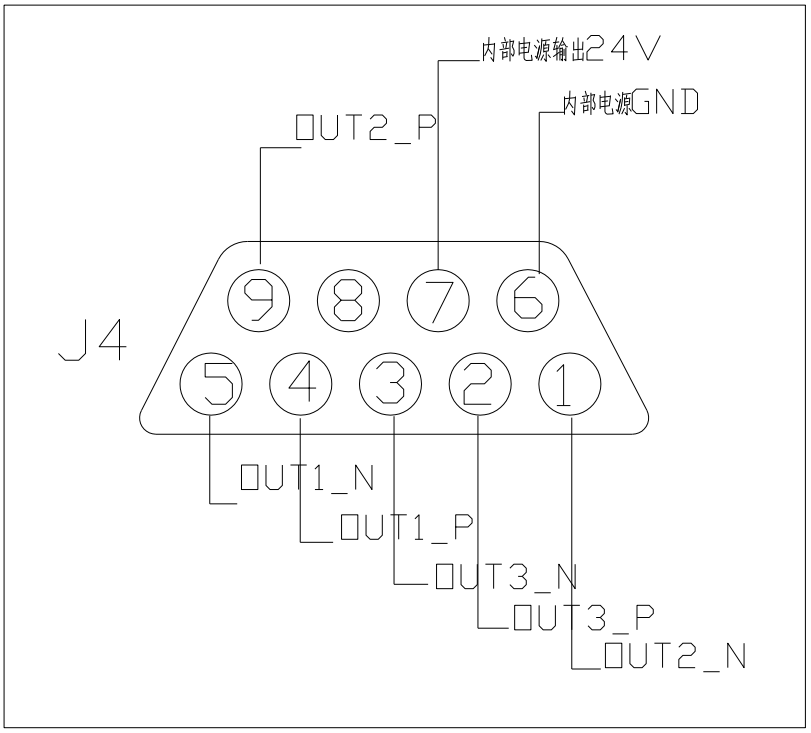

Figure 4

④. Simplified internal circuit design of J4 IO output interface

There is a built-in ordinary opt coupler and an open-drain output in the IO output interface. Users need to connect the pull-up or pull-down resistor based on the power requirements when using it.

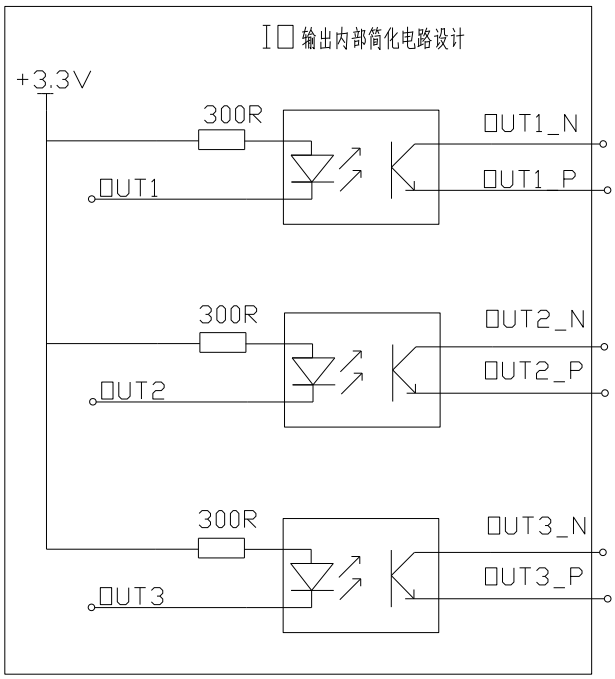

Figure 5

Huiling-tech Robotic Co., Ltd

Tel 0755-36382405

Email hitbot@hitbot.cc

Website www.hitbot.cc

Address 1st floor, 3 Building, Robot Intelligence and Manufacturing Industrial Park,
Dayang Road90, Baoan District, Shenzhen, Guangdong, PR China.